STOVAX

PRODUCT DIMENSIONS

IMPORTANT

The dimensional information given below is to assist you in your choice of appliance. It is not intended to provide all the information that may be required for installation purposes. This can be obtained from your retailer or by viewing/downloading the full installation manuals.

STOCKTON 4

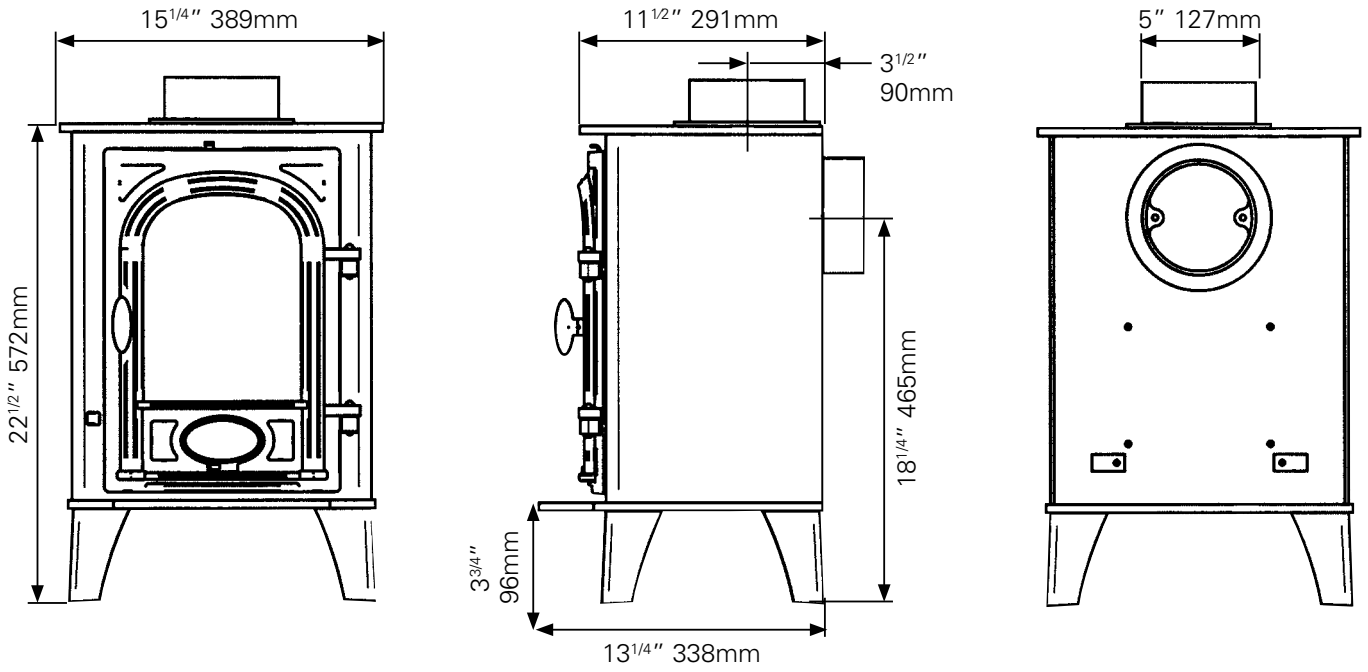

Weight: 83g